G-Series Simulated Hung Details
G600 Series Dry Glaze Window
3 $\frac{1}{4}$" Frame Depth
1/2 Scale 8.5x11

△ =1/8" DIA EQUAL PRESSURE HOLE (CENTER LINE OF TOP HORIZONTAL)

○ =1/4" DIA WEEP HOLE (APPROX 3" FROM EDGE)

▭ =FACE MOUNTED WEEP (APPROX 3" FROM EDGE)

=WEEP OPTIONS; HOLE TO WEEP INTO SUBSILL, OR FACE MOUNTED WEEP IF NO SUBSILL (APPROX 3" FROM EDGE)

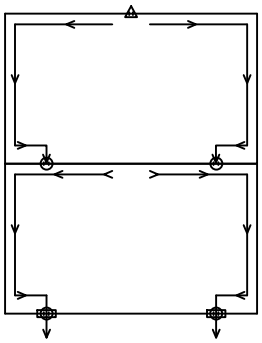

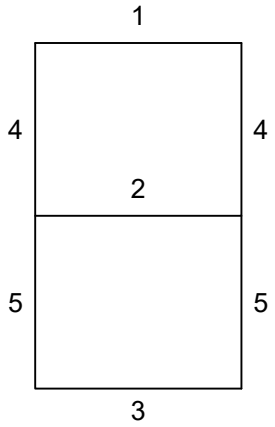

FX/FX

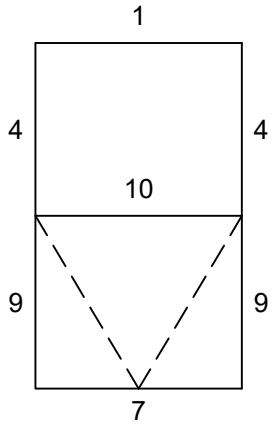

FX/PI

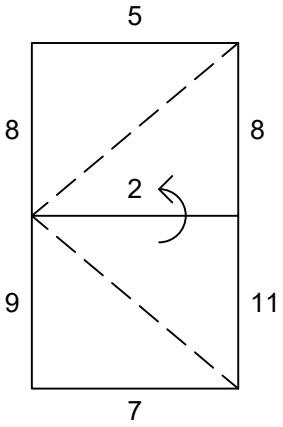

SDH CI

Copyright © 2025 Peerless Products Inc.
2403 S. Main Street · Fort Scott, Kansas 66701 · 620-223-4610
http://www.peerlessproducts.com
Note: PDF Files & Letter Size Paper = Half Scale
AutoCAD Drawing File = Full Scale

Updated: 10/30/25

G-Series Simulated Hung Details
G600 Series Dry Glaze Window
3 $\frac{1}{4}$" Frame Depth
1/2 Scale 8.5x11

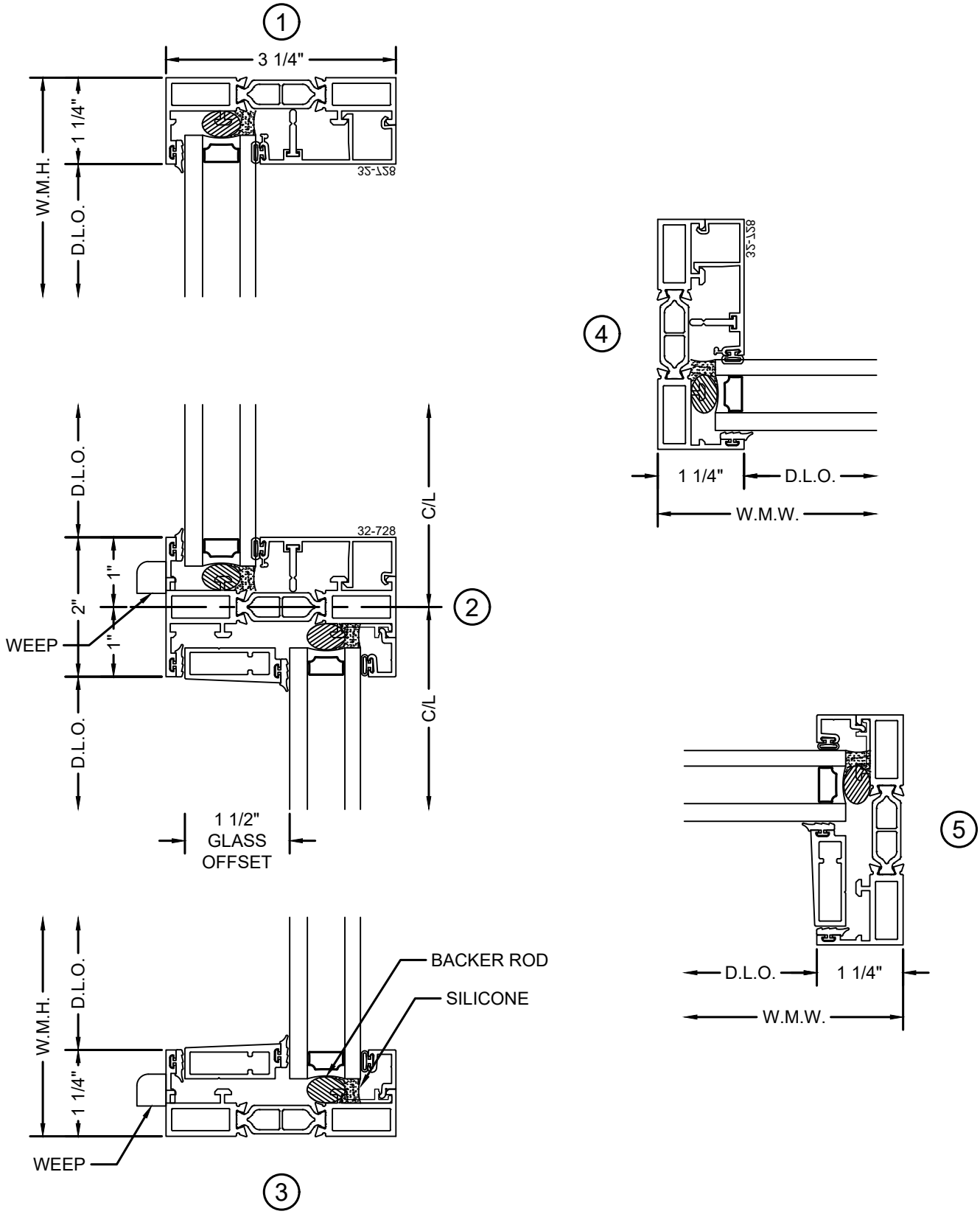

Copyright © 2025 Peerless Products Inc.
2403 S. Main Street · Fort Scott, Kansas 66701 · 620-223-4610
http://www.peerlessproducts.com
Note: PDF Files & Letter Size Paper = Half Scale
AutoCAD Drawing File = Full Scale

Updated: 10/30/25

6

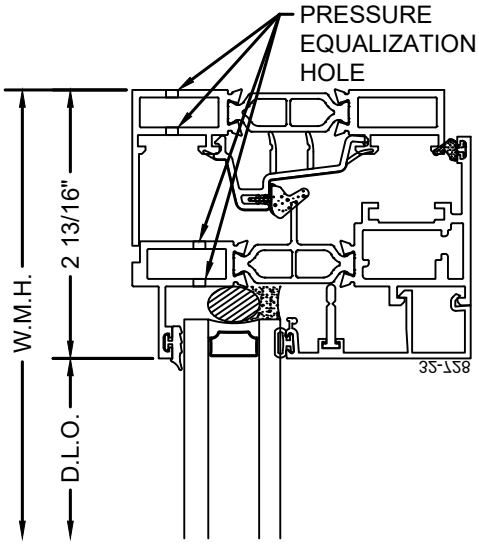

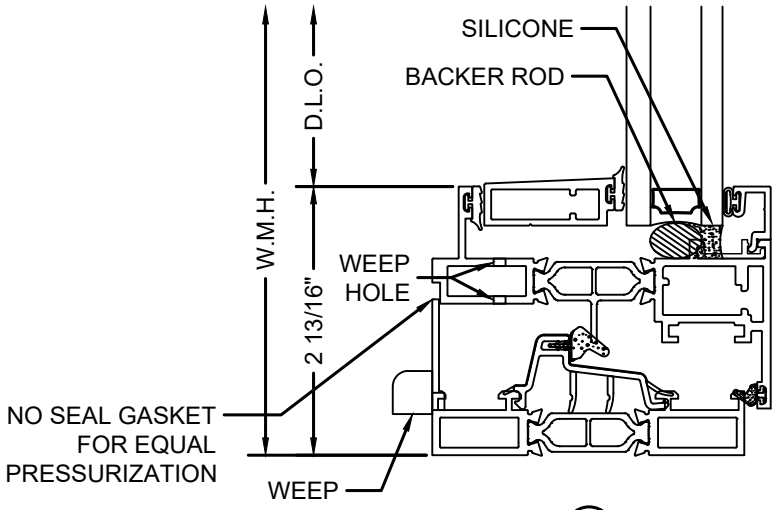

7

8

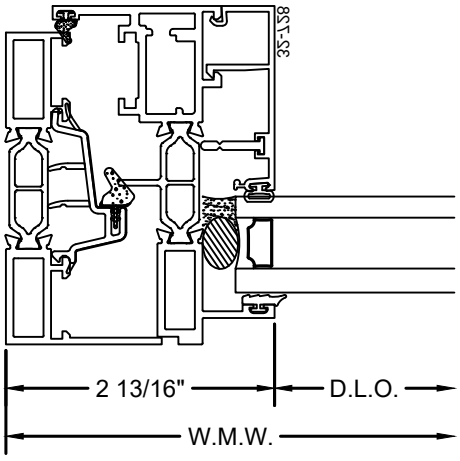

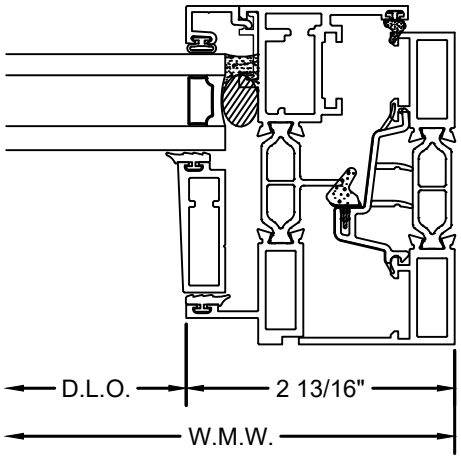

9

Copyright © 2025 Peerless Products Inc.
2403 S. Main Street · Fort Scott, Kansas 66701 · 620-223-4610
http://www.peerlessproducts.com
Note: PDF Files & Letter Size Paper = Half Scale
AutoCAD Drawing File = Full Scale

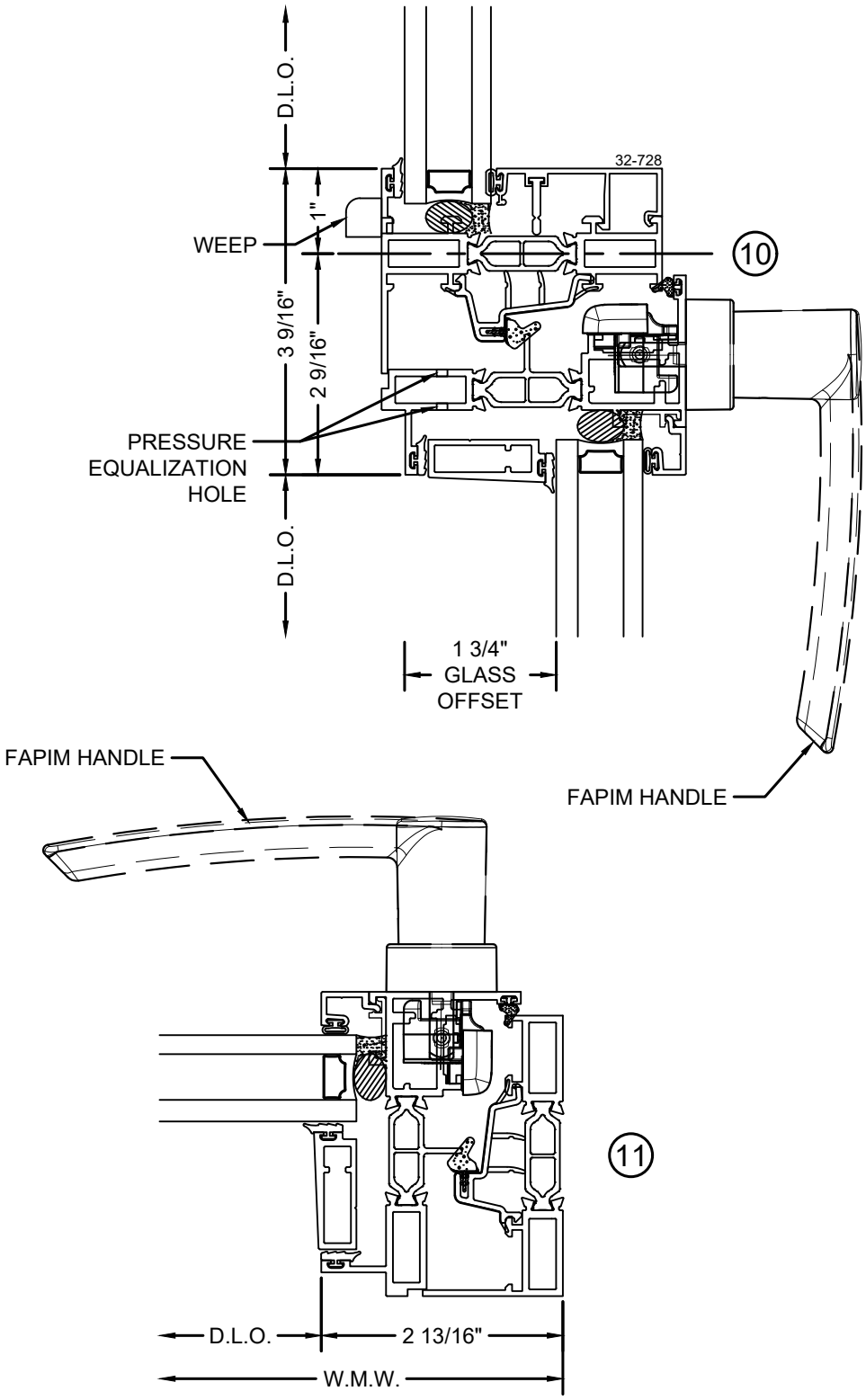

Copyright © 2025 Peerless Products Inc.
2403 S. Main Street · Fort Scott, Kansas 66701 · 620-223-4610
http://www.peerlessproducts.com
Note: PDF Files & Letter Size Paper = Half Scale
AutoCAD Drawing File = Full Scale